Accessories for ECHO products can be found at:

*Los accesorios para los productos ECHO se pueden encontrar en:*

**http://www.echo-usa.com/Products/Accessories**

# *PARTS CATALOG*
## *LISTA DE PIEZAS*

# DLM-2100SP Lawn Mower

DLM-2100SP Cortacésped

**SERIAL NUMBER**
NÚMERO DE SERIE

**405LMS000001 - 405LMS999999**

**ECHO Incorporated**
400 Oakwood Road, Lake Zurich, Illinois 60047
WWW.ECHO-USA.COM

©2025 ECHO Incorporated. All Rights Reserved

P/N 99922205781
REVISED 11/21/25

**Handles** ..... 3
Manejas

**Power Head S/N: 405LMS000001 - 405LMS101290** ..... 4
Cabeza de la energía S/N: 405LMS000001 - 405LMS101290

**Power Head S/N: 405LMS000001 - 405LMS101290** ..... 5
Cabeza de la energía S/N: 405LMS000001 - 405LMS101290

**Power Head S/N: 405LMS101291 - 405LMS999999** ..... 6
Cabeza de la energía S/N: 405LMS101291 - 405LMS999999

**Power Head S/N: 405LMS101291 - 405LMS999999** ..... 7
Cabeza de la energía S/N: 405LMS101291 - 405LMS999999

**Mower Deck Assembly** ..... 8
Conjunto de plataforma de corte

**Mower Deck Assembly** ..... 9
Conjunto de plataforma de corte

**Wheels and Drive** ..... 10
Ruedas y propulsión

**Wheels and Drive** ..... 11
Ruedas y propulsión

**Throttle Control** ..... 12
Control del acelerador

**Throttle Control** ..... 13
Control del Acelerador

**Spare Parts** ..... 14
Pieza de Repuestos

**Spare Parts** ..... 15
Pieza de Repuestos

**Accessories** ..... 15
Accesorios

**Labels S/N: 405LMS000001 - 405LMS101290** 16
Etiquetas S/N: 405LMS000001 - 405LMS101290

**Labels S/N: 405LMS000001 - 405LMS101290** 17
Etiquetas S/N: 405LMS000001 - 405LMS101290

**Labels S/N: 405LMS101291 - 405LMS999999** 18
Etiquetas S/N: 405LMS101291 - 405LMS999999

**Labels S/N: 405LMS101291 - 405LMS999999** 19
Etiquetas S/N: 405LMS101291 - 405LMS999999

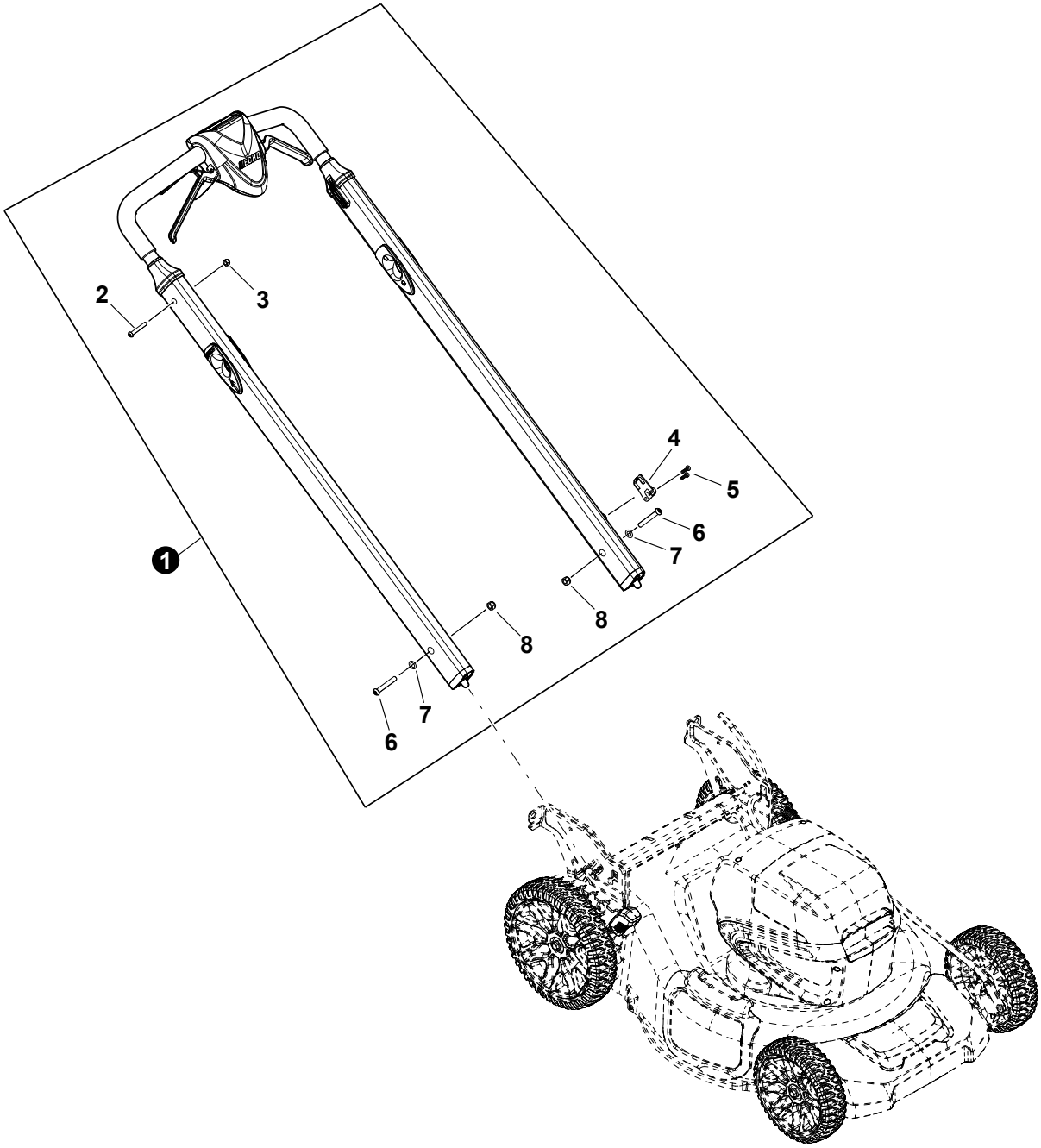


| NO. | PART NUMBER | QTY. | DESCRIPTION | DESCRIPCIÓN |
|---|---|---|---|---|
| **1** | **YH466000570** | **1** | **HANDLE ASSY** | **CONJUNTO DEL ASA** |
| 2 | YH415001070 | 2 | +SCREW | +TORNILLO |
| 3 | YH450000460 | 2 | +NUT | +TUERCA |
| 4 | YH479002790 | 1 | +COVER, HANDLEBAR WIRE HARNESS | +CUBIERTA, MAZO DE CABLES DEL MANILLAR |
| 5 | YH415001120 | 2 | +SCREW | +TORNILLO |
| 6 | YH415001170 | 2 | +SCREW | +TORNILLO |
| 7 | YH451000570 | 2 | +WASHER | +ARANDELA |
| 8 | YH450000550 | 2 | +NUT | +TUERCA |



+ Denotes item is part of an assembly
++ Denotes item is part of a sub-assembly

+ Denota artículo forma parte de una asamblea
++ Denota artículo forma parte de un submontaje

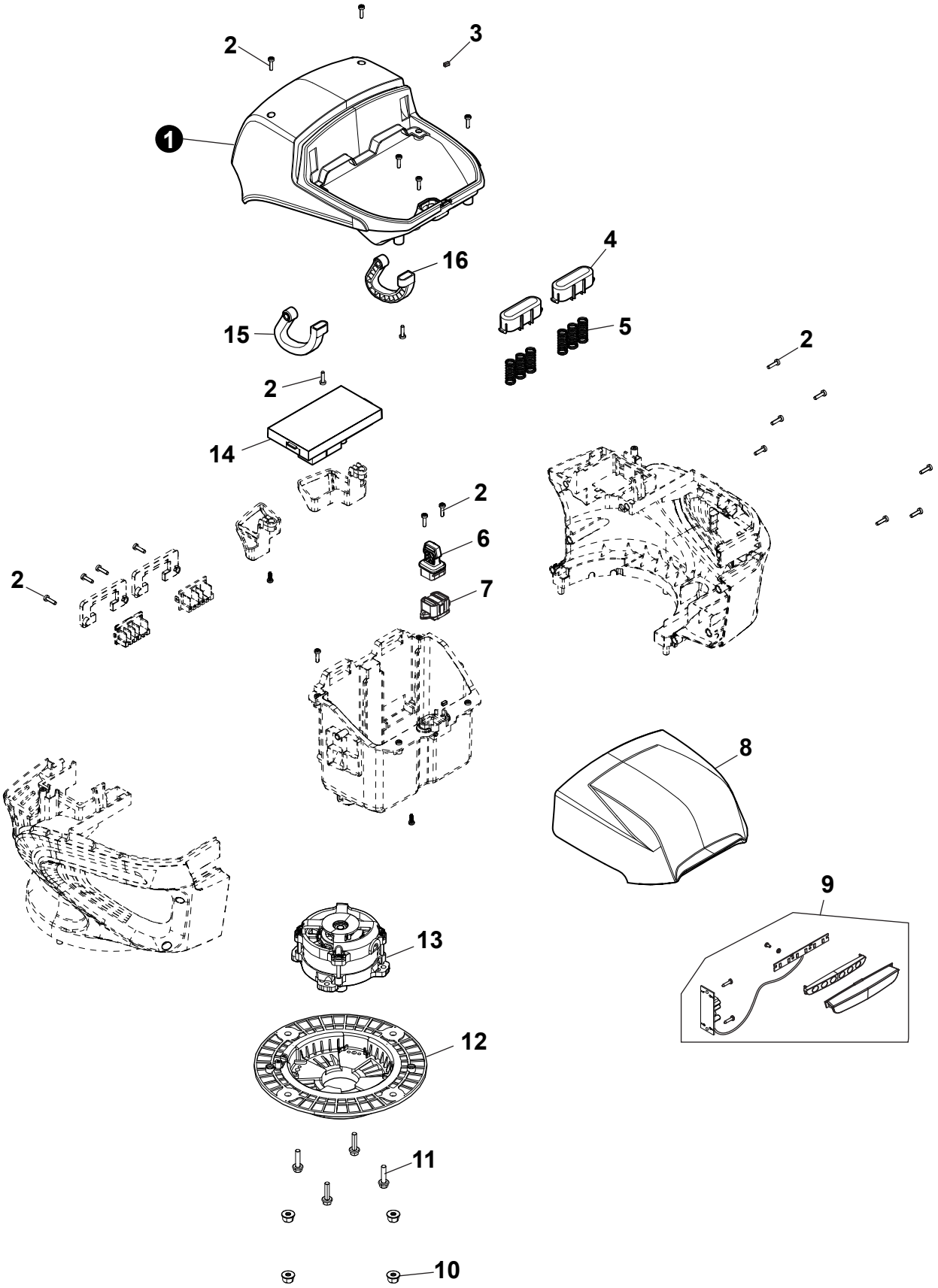




+ Denotes item is part of an assembly
++ Denotes item is part of a sub-assembly

+ Denota artículo forma parte de una asamblea
++ Denota artículo forma parte de un submontaje

| NO. | PART NUMBER | QTY. | DESCRIPTION | DESCRIPCIÓN |
|---|---|---|---|---|
| 1 | YH479002440 | 1 | COVER, UPPER | CUBIERTA, SUPERIOR |
| 2 | YH415000890 | 21 | SCREW | TORNILLO |
| 3 | YH468001760 | 1 | PLUG, RUBBER | TAPÓN, GOMA |
| 4 | YH479002460 | 2 | COVER, BATTERY SPRING | CUBIERTA, MUELLE BATERÍA |
| 5 | YH476000240 | 6 | SPRING | RESORTE |
| 6 | YH470001030 | 1 | KEY | LLAVE |
| 7 | YH321000290 | 1 | SWITCH, KEY | INTERRUPTOR, LLAVE |
| 8 | YH479002450 | 1 | COVER, BATTERY | CUBIERTA, BATERÍA |
| 9 | YH310000060 | 1 | LIGHT ASSY, LED | CONJUNTO DE LA LUZ, LED |
| 10 | YH450000210 | 4 | NUT | TUERCA |
| 11 | YH415000920 | 4 | SCREW | TORNILLO |
| 12 | YH479002860 | 1 | MOTOR COVER | CUBIERTA,PARACHOQUES INFERIOR |
| 13 | YH313000030 | 1 | MOTOR | MOTOR |
| 14 | YH317000000 | 1 | PCBA (PRINTED CIRCUIT BOARD ASSEMBLY) | CONJUNTO DE PLACA DE CIRCUITO IMPRESO |
| 15 | YH470001020 | 1 | HINGE | BISAGRA |
| 16 | YH470001010 | 1 | HINGE | BISAGRA |

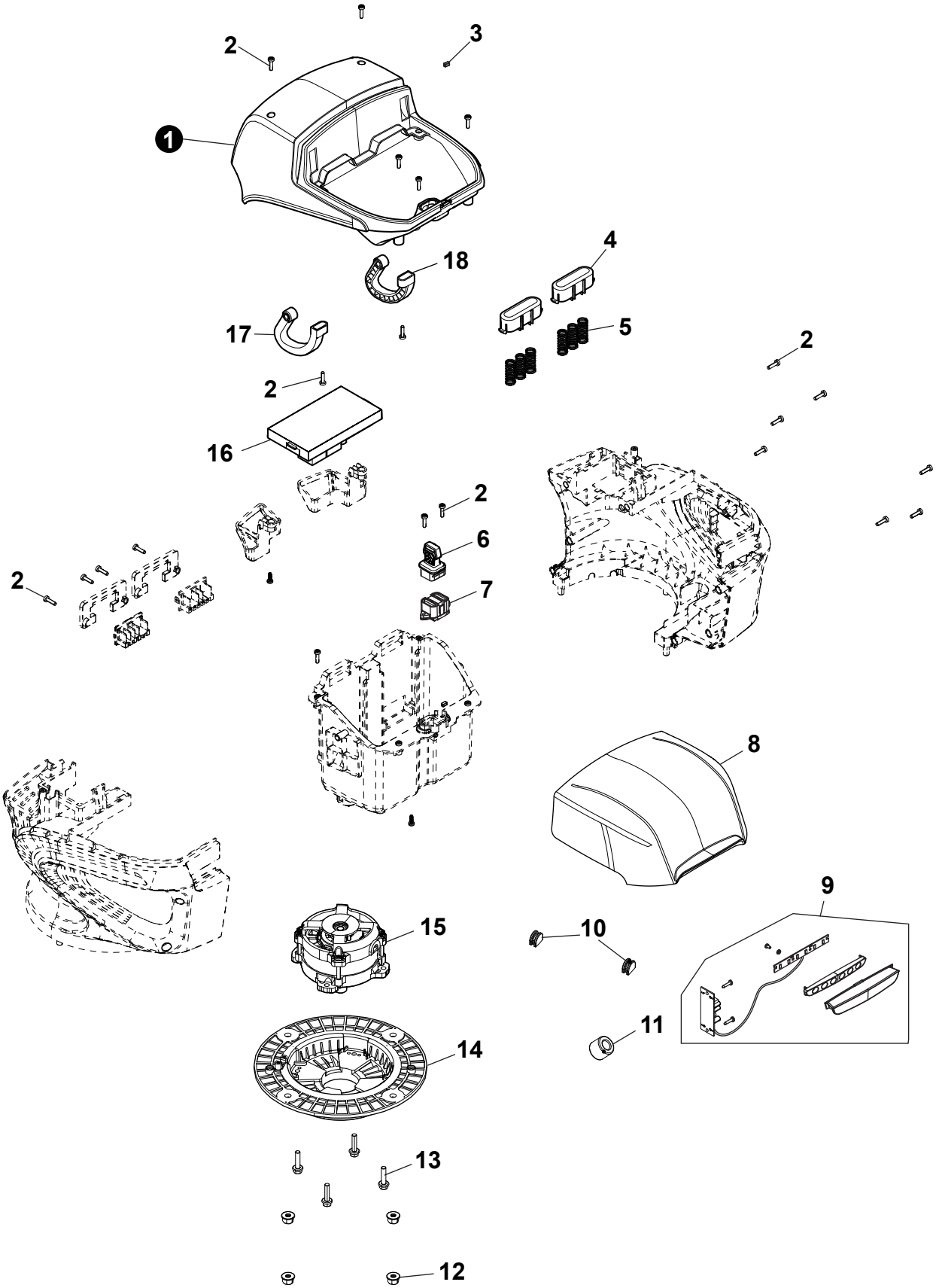




+ Denotes item is part of an assembly
++ Denotes item is part of a sub-assembly

+ Denota artículo forma parte de una asamblea
++ Denota artículo forma parte de un submontaje

| NO. | PART NUMBER | QTY. | DESCRIPTION | DESCRIPCIÓN |
|---|---|---|---|---|
| 1 | YH479002440 | 1 | COVER, UPPER | CUBIERTA, SUPERIOR |
| 2 | YH415000890 | 21 | SCREW | TORNILLO |
| 3 | YH468001760 | 1 | PLUG, RUBBER | TAPÓN, GOMA |
| 4 | YH479002460 | 2 | COVER, BATTERY SPRING | CUBIERTA, MUELLE BATERÍA |
| 5 | YH476000240 | 6 | SPRING | RESORTE |
| 6 | YH470001030 | 1 | KEY | LLAVE |
| 7 | YH321000290 | 1 | SWITCH, KEY | INTERRUPTOR, LLAVE |
| 8 | YH479002880 | 1 | COVER, BATTERY | CUBIERTA, BATERÍA |
| 9 | YH310000060 | 1 | LIGHT ASSY, LED | CONJUNTO DE LA LUZ, LED |
| 10 | YH468001890 | 2 | PLUG, RUBBER | TAPÓN, CAUCHO |
| 11 | YH318000110 | 1 | RING, MAGNETIC | ANILLO MAGNÉTICO |
| 12 | YH450000210 | 4 | NUT | TUERCA |
| 13 | YH415000920 | 4 | SCREW | TORNILLO |
| 14 | YH479002860 | 1 | MOTOR COVER | CUBIERTA,PARACHOQUES INFERIOR |
| 15 | YH313000030 | 1 | MOTOR | MOTOR |
| 16 | YH317000000 | 1 | PCBA (PRINTED CIRCUIT BOARD ASSEMBLY) | CONJUNTO DE PLACA DE CIRCUITO IMPRESO |
| 17 | YH470001020 | 1 | HINGE | BISAGRA |
| 18 | YH470001010 | 1 | HINGE | BISAGRA |

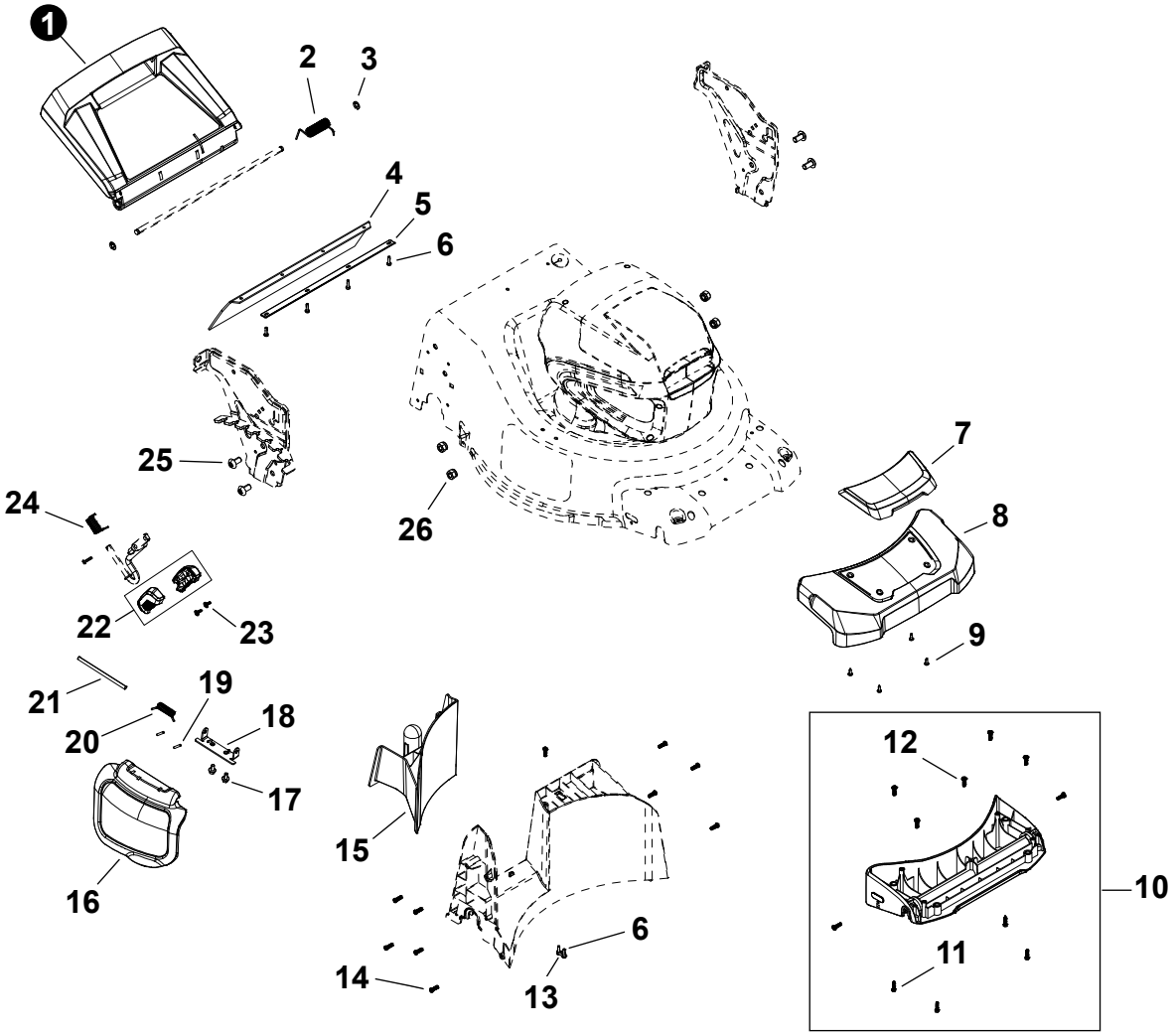




+ Denotes item is part of an assembly
++ Denotes item is part of a sub-assembly

+ Denota artículo forma parte de una asamblea
++ Denota artículo forma parte de un submontaje

| NO. | PART NUMBER | QTY. | DESCRIPTION | DESCRIPCIÓN |
|---|---|---|---|---|
| 1 | YH479002570 | 1 | DOOR, REAR | PUERTA, TRASERA |
| 2 | YH476000270 | 1 | SPRING, TORSION | MUELLE, TORSIÓN |
| 3 | YH452000820 | 2 | CIRCLIP | GRUPILLA |
| 4 | YH479002550 | 1 | SHIELD, DEBRIS | PROTECCIÓN, RESIDUOS |
| 5 | YH479002560 | 1 | PLATE, RETAINER | PLACA, RETENCIÓN |
| 6 | YH415000890 | 6 | SCREW | TORNILLO |
| 7 | YH479002610 | 1 | COVER, DECORATIVE | CUBIERTA, DECORATIVA |
| 8 | YH479002600 | 1 | COVER, FRONT | CUBIERTA, DELANTERA |
| 9 | YH415000920 | 4 | SCREW | TORNILLO |
| **10** | **YH479002850** | **1** | **LOWER BUMPER COVER** | **PLACA,REGULADOR DE ALTURA DERECHA** |
| 11 | YH415000950 | 4 | +SCREW | +TORNILLO |
| 12 | YH415000990 | 7 | +SCREW | +TORNILLO |
| 13 | YH479002580 | 1 | RETAINER | RETENCIÓN |
| 14 | YH415000940 | 10 | SCREW | TORNILLO |
| 15 | YH479002470 | 1 | PLUG, MULCH | TAPÓN, MULCHING |
| 16 | YH479002530 | 1 | COVER, SIDE DISCHARGE | CUBIERTA, DESCARGA LATERAL |
| 17 | YH435000490 | 2 | BOLT, FLANGE | PERNO, BRIDA |
| 18 | YH479002540 | 1 | BRACKET, SIDE DISCHARGE | SOPORTE, DESCARGA LATERAL |
| 19 | YH468001770 | 2 | SLEEVE, RUBBER | MANGUITO, GOMA |
| 20 | YH476000250 | 1 | SPRING, TORSION | MUELLE, TORSIÓN |
| 21 | YH471000110 | 1 | SHAFT, SIDE DISCHARGE | EJE, DESCARGA LATERAL |
| 22 | YH466000580 | 1 | HANDLE, HEIGHT ADJUSTMENT | ASA, AJUSTE DE ALTURA |
| 23 | YH415000980 | 2 | SCREW, PAN HEAD SELF TAP | TORNILLO, AUTORROSCANTE DE CABEZA CILÍNDRICA |
| 24 | YH476000260 | 1 | SPRING, TORSION | MUELLE, TORSIÓN |
| 25 | YH435000760 | 4 | BOLT | PERNO |
| 26 | YH450000470 | 4 | NUT, NYLOC | TUERCA, NYLOC |



+ Denotes item is part of an assembly
++ Denotes item is part of a sub-assembly

+ Denota artículo forma parte de una asamblea
++ Denota artículo forma parte de un submontaje

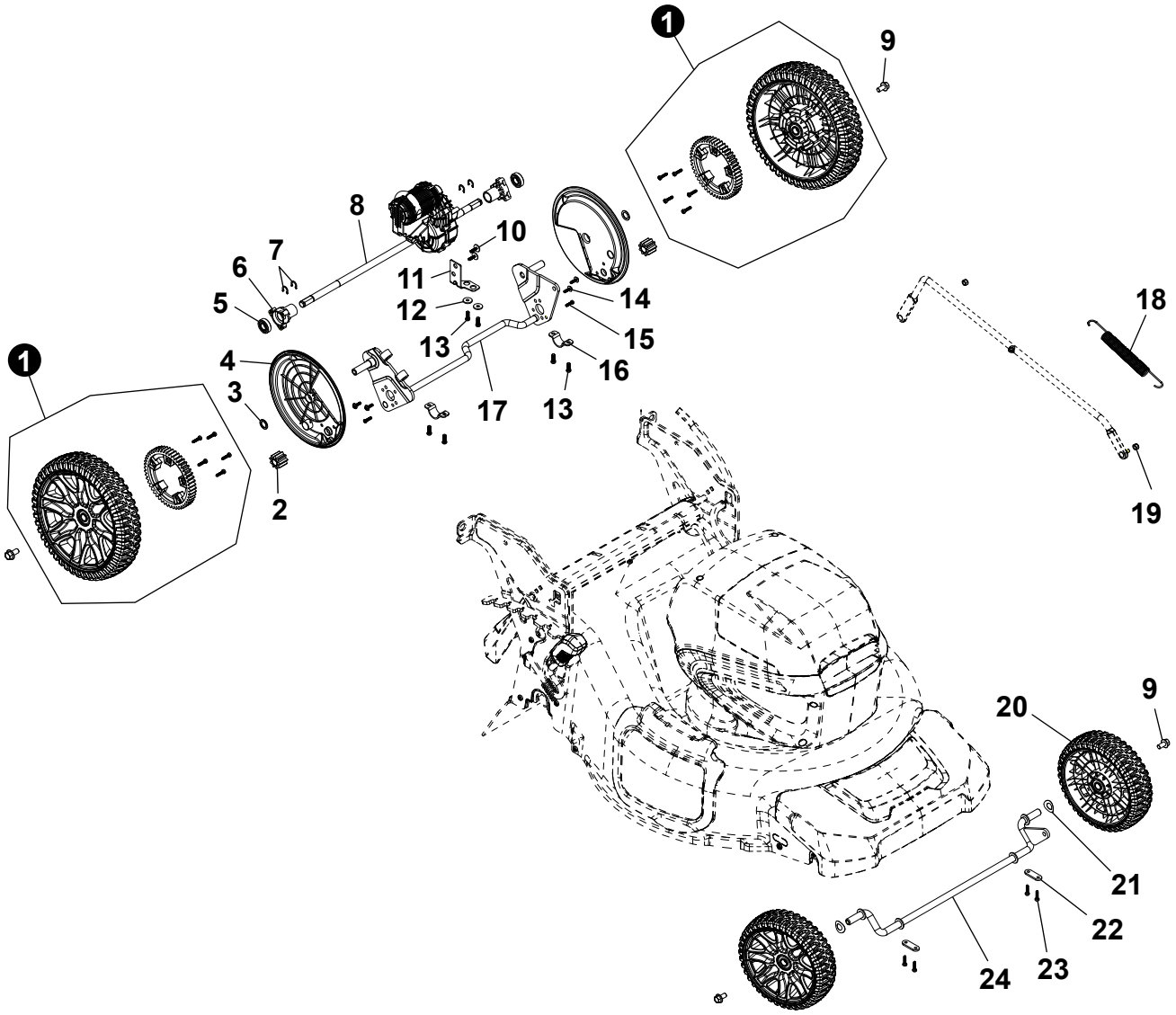




+ Denotes item is part of an assembly
++ Denotes item is part of a sub-assembly

+ Denota artículo forma parte de una asamblea
++ Denota artículo forma parte de un submontaje

| NO. | PART NUMBER | QTY. | DESCRIPTION | DESCRIPCIÓN |
|---|---|---|---|---|
| 1 | YH478000190 | 2 | WHEEL ASSY | CONJUNTO DE LA RUEDA |
| 2 | YH464000030 | 2 | GEAR, PINION | ENGRANAJE, PIÑÓN |
| 3 | YH451000540 | 2 | WASHER | ARANDELA |
| 4 | YH479002510 | 2 | COVER, DUST | CUBIERTA, ANTIPOLVO |
| 5 | YH453000180 | 2 | BEARING, BALL | RODAMIENTO, BOLAS |
| 6 | YH479002490 | 2 | HOUSING, BEARING | CARCASA, RODAMIENTO |
| 7 | YH452000810 | 4 | CIRCLIP | GRUPILLA |
| 8 | YH602000070 | 1 | TRANSMISSION | TRANSMISIÓN |
| 9 | YH435000480 | 4 | BOLT, WHEEL | PERNO, RUEDA |
| 10 | YH415000930 | 2 | SCREW | TORNILLO |
| 11 | YH479002500 | 1 | BRACKET | SOPORTE |
| 12 | YH451000530 | 2 | WASHER | ARANDELA |
| 13 | YH415000940 | 2 | SCREW | TORNILLO |
| 14 | YH415000960 | 4 | SCREW | TORNILLO |
| 15 | YH415000970 | 2 | SCREW | TORNILLO |
| 16 | YH479002520 | 2 | BRACKET, AXLE RETAINER | SOPORTE, RETENCIÓN DEL EJE |
| 17 | YH478000200 | 1 | AXLE, REAR | EJE, TRASERO |
| 18 | YH476000280 | 1 | SPRING | RESORTE |
| 19 | YH450000460 | 2 | NUT | TUERCA |
| 20 | YH478000210 | 2 | WHEEL | RUEDA |
| 21 | YH451000550 | 2 | WASHER | ARANDELA |
| 22 | YH479002590 | 2 | BRACKET, AXLE RETAINER | SOPORTE, RETENCIÓN DEL EJE |
| 23 | YH415000950 | 4 | SCREW | TORNILLO |
| 24 | YH478000220 | 1 | AXLE, FRONT | EJE, DELANTERO |

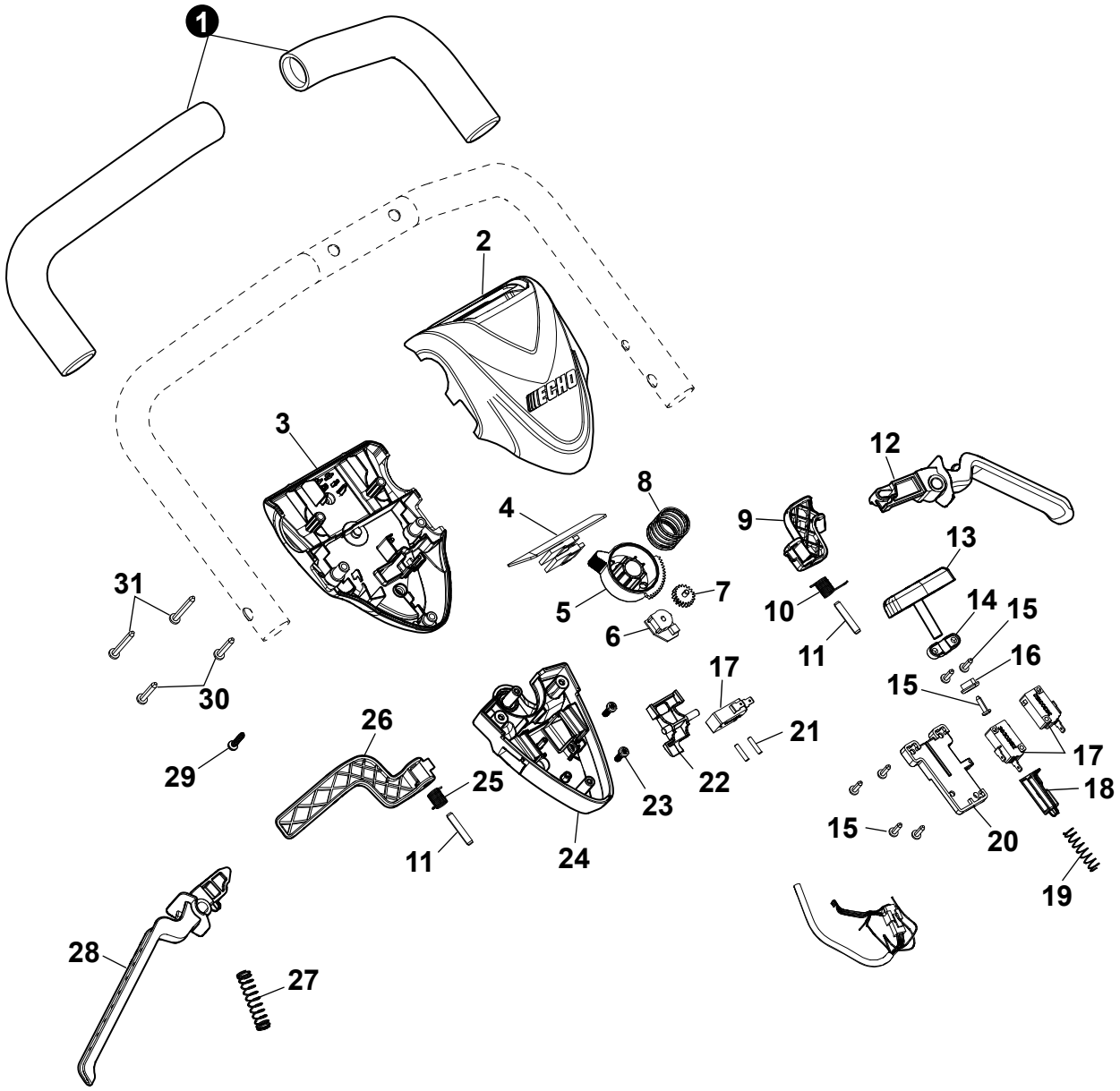




+ Denotes item is part of an assembly
++ Denotes item is part of a sub-assembly

+ Denota artículo forma parte de una asamblea
++ Denota artículo forma parte de un submontaje

# Throttle Control
Control del Acelerador

| NO. | PART NUMBER | QTY. | DESCRIPTION | DESCRIPCIÓN |
|---|---|---|---|---|
| 1 | YH466000590 | 2 | GRIP, HANDLE | AGARRE, ASA |
| 2 | YH479002640 | 1 | COVER, TOP SWITCHBOX | CUBIERTA, CAJA DE CONEXIONES SUPERIOR |
| 3 | YH479002650 | 1 | COVER, LOWER SWITCHBOX | CUBIERTA, CAJA DE CONEXIONES INFERIOR |
| 4 | YH321000300 | 1 | SWITCH, MEMBRANE | INTERRUPTOR, MEMBRANA |
| 5 | YH470001050 | 1 | BUTTON | BOTÓN |
| 6 | YH314000060 | 1 | POTENTIOMETER | POTENCIÓMETRO |
| 7 | YH464000040 | 1 | GEAR, SPEED ADJUSTMENT | ENGRANAJE, AJUSTE DE VELOCIDAD |
| 8 | YH476000300 | 1 | SPRING | RESORTE |
| 9 | YH470001090 | 1 | TRIGGER, LEFT SPEED | GATILLO, VELOCIDAD IZQUIERDA |
| 10 | YH476000330 | 1 | SPRING | RESORTE |
| 11 | YH471000130 | 2 | PIN, LOCATING | PASADOR, UBICACIÓN |
| 12 | YH470001070 | 1 | TRIGGER, LEFT | GATILLO, IZQUIERDO |
| 13 | YH470001040 | 1 | BUTTON, SWITCH | BOTÓN, INTERRUPTOR |
| 14 | YH479002620 | 1 | PLATE, RETAINING | PLACA, RETENCIÓN |
| 15 | YH415000910 | 7 | SCREW | TORNILLO |
| 16 | YH468001780 | 1 | CUSHION | ALMOHADILLA |
| 17 | YH321000310 | 3 | SWITCH | INTERRUPTOR |
| 18 | YH468001790 | 1 | PLUNGER | ÉMBOLO |
| 19 | YH476000290 | 1 | SPRING | RESORTE |
| 20 | YH479002630 | 1 | PLATE, RETAINING | PLACA, RETENCIÓN |
| 21 | YH471000120 | 2 | SHAFT, PIN | EJE, PASADOR |
| 22 | YH479002670 | 1 | PLATE, RETAINING | PLACA, RETENCIÓN |
| 23 | YH415000920 | 2 | SCREW | TORNILLO |
| 24 | YH479002660 | 1 | COVER, SPEED | CUBIERTA, VELOCIDAD |
| 25 | YH476000330 | 1 | SPRING | RESORTE |
| 26 | YH470001080 | 1 | TRIGGER, RIGHT SPEED | GATILLO, VELOCIDAD DERECHA |
| 27 | YH476000310 | 1 | SPRING | RESORTE |
| 28 | YH470001060 | 1 | TRIGGER, RIGHT | GATILLO, DERECHO |
| 29 | YH415001020 | 1 | SCREW | TORNILLO |
| 30 | YH415001010 | 2 | SCREW | TORNILLO |
| 31 | YH415001000 | 2 | SCREW | TORNILLO |



+ Denotes item is part of an assembly
++ Denotes item is part of a sub-assembly

+ Denota artículo forma parte de una asamblea
++ Denota artículo forma parte de un submontaje

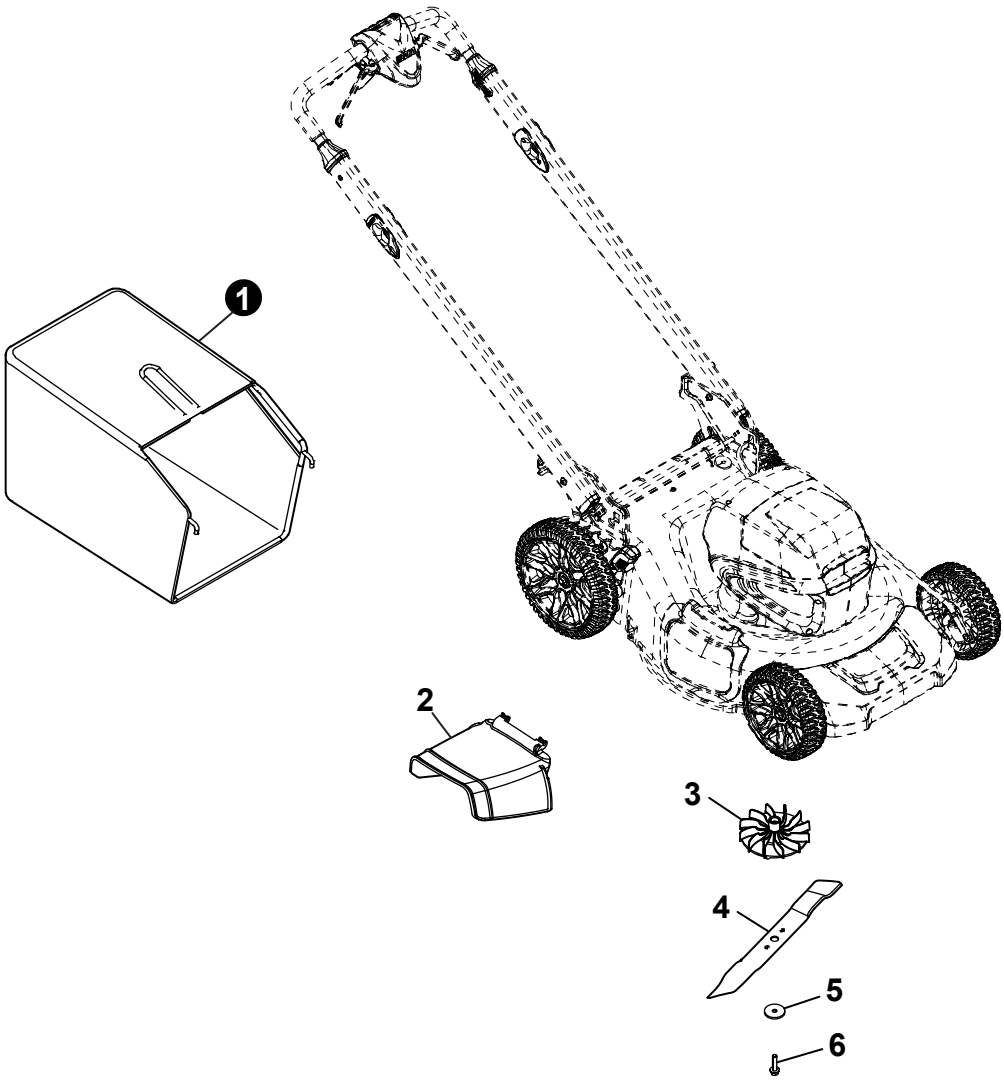




+ Denotes item is part of an assembly
++ Denotes item is part of a sub-assembly

+ Denota artículo forma parte de una asamblea
++ Denota artículo forma parte de un submontaje

| NO. | PART NUMBER | QTY. | DESCRIPTION | DESCRIPCIÓN |
|---|---|---|---|---|
| 1 | YH486000010 | 1 | BAG ASSY, GRASS | CONJUNTO DE LA BOLSA, HIERBA |
| 2 | YH479002480 | 1 | CHUTE, SIDE DISCHARGE | CONDUCTO, DESCARGA LATERAL |
| 3 | YH472000140 | 1 | FAN | VENTILADOR |
| 4 | 99988806000 | 1 | 56V MOWER BLADE | CUCHILLA |
| 5 | YH451000520 | 1 | WASHER | ARANDELA |
| 6 | YH435000380 | 1 | BOLT, BLADE | PERNO, CUCHILLA |

## Accessories
Accesorios

| NO. | PART NUMBER | QTY. | DESCRIPTION | DESCRIPCIÓN |
|---|---|---|---|---|
| 1 | LC-56V2AAB | 1 | CHARGER, BATTERY STANDARD 56V | CARGADOR DE BATERÍA ESTÁNDAR DE 56V |
| 2 | LC-56V4AAB | 1 | CHARGER, BATTERY RAPID 56V | CARGADOR DE BATERÍA RÁPIDO 56V |
| 3 | LBP-56V125A | 1 | BATTERY, 56V LITHIUM-ION - 2.5Ah | BATERÍA DE IONES DE LITIO 56V - 2.5Ah |
| 4 | LBP-56V250A | 1 | BATTERY, 56V LITHIUM-ION - 5.0Ah | BATERÍA DE IONES DE LITIO 56V - 5.0Ah |

ECHO
56V
MAX - 21"
DLM-2100SP
SELF-PROPELLED LAWN MOWER
TONDEUSE À GAZON AUTOMOTRICE
CORTACÉSPED AUTOPROPULSADA
Made in China
Fabriqué en Chine
Hecho en China
Intertek
1-800-432-3246
Build date:
SN:
QR
WARNING:
AVERTISSEMENT:
ADVERTENCIA:
DRIVE SPEED
DLM-2100SP
BRUSHLESS
21"
SELF-PROPELLED
1
2
3
4

DANGER/DANGER/PELIGRO
KEEP HANDS AND FEET AWAY
GARDER MAINS ET PIEDS À DISTANCE
MANTENGA LAS MANOS Y LOS PIES ALEJADOS
DLM-2100SP
BRUSHLESS
WARNING/AVERTISSEMENT/ADVERTENCIA
5
6
7

| NO. | PART NUMBER | QTY. | DESCRIPTION | DESCRIPCIÓN |
|---|---|---|---|---|
| 1 | YH653001230 | 1 | LABEL, ADJUSTMENT | ETIQUETA,AJUSTE |
| 2 | YH653001210 | 1 | LABEL | ETIQUETA |
| 3 | YH653001190 | 1 | LABEL, LEFT DECK ECHO | LOGOTIPO DE LA MARCA, PLATAFORMA IZQUIERDA |
| 4 | YH653001240 | 1 | LABEL, 21" SELF PROPELLED | LOGOTIPO,21" AUTOPROPULSADA |
| 5 | YH653001200 | 1 | LABEL, RIGHT DECK ECHO | LOGOTIPO DE LA MARCA, CUBIERTA DERECHA |
| 6 | YH653001220 | 1 | LABEL, SIDE WARNING | ETIQUETA,ADVERTENCIA LATERAL |
| 7 | YH653001180 | 2 | LABEL, WARNING | ETIQUETA,ADVERTENCIA |

ECHO
56V
MAX - 21"
DLM-2100SP
SELF-PROPELLED LAWN MOWER
TONDEUSE À GAZON AUTOMOTRICE
CORTACÉSPED AUTOPROPULSADA
Made in China
Fabriqué en Chine
Hecho en China
Intertek
1-800-432-3246
Build date:
SN:
OR:
100' (30m)
WARNING:
AVERTISSEMENT:
ADVERTENCIA:
2
3
DLM-2100SP
BRUSHLESS
1
DRIVE SPEED
21"
STEEL DECK
4

DANGER/DANGER/PELIGRO
KEEP HANDS AND FEET AWAY
GARDER MAINS ET PIEDS À DISTANCE
MANTENGA LAS MANOS Y LOS PIES ALEJADOS
7
5
DLM-2100SP
BRUSHLESS
WARNING/AVERTISSEMENT/ADVERTENCIA
6

| NO. | PART NUMBER | QTY. | DESCRIPTION | DESCRIPCIÓN |
|---|---|---|---|---|
| 1 | YH653001230 | 1 | LABEL, ADJUSTMENT | ETIQUETA,AJUSTE |
| 2 | YH653001210 | 1 | LABEL | ETIQUETA |
| 3 | YH653001190 | 1 | LABEL, LEFT DECK ECHO | LOGOTIPO DE LA MARCA, PLATAFORMA IZQUIERDA |
| 4 | YH653001660 | 1 | LABEL, 21" STEEL DECK | LOGOTIPO,PLATAFORMA DE ACERO DE 21" |
| 5 | YH653001200 | 1 | LABEL, RIGHT DECK ECHO | LOGOTIPO DE LA MARCA, CUBIERTA DERECHA |
| 6 | YH653001220 | 1 | LABEL, SIDE WARNING | ETIQUETA,ADVERTENCIA LATERAL |
| 7 | YH653001180 | 2 | LABEL, WARNING | ETIQUETA,ADVERTENCIA |